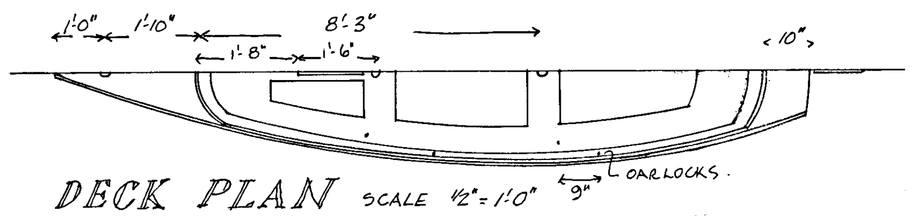


DECK PLAN SCALE 1/2" = 1'-0"

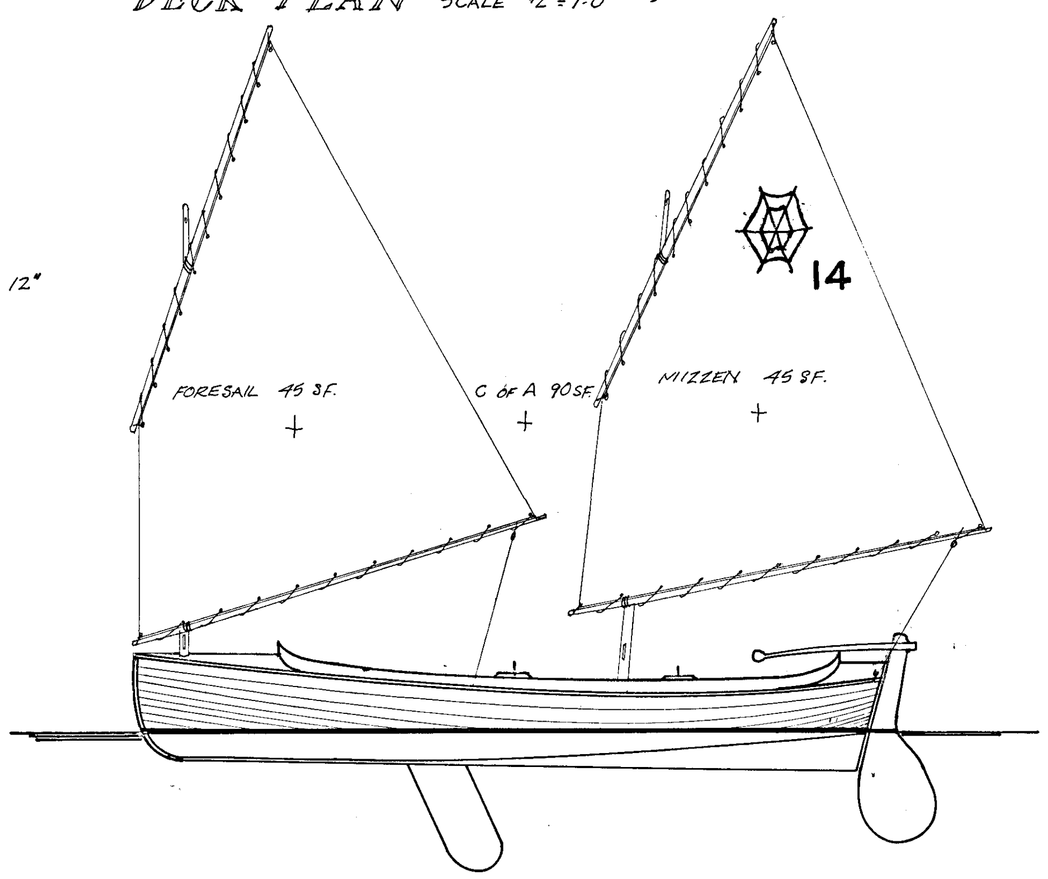


SAIL PLAN SCALE 1/2" = 1'-0"

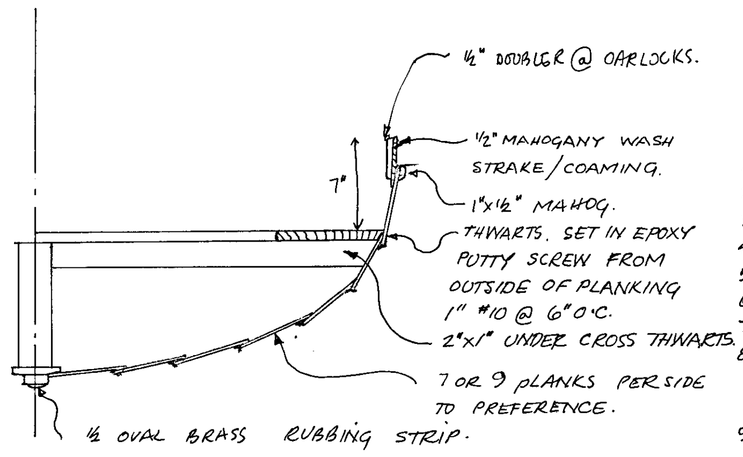


CONSTRUCTION SECTION SCALE 1 1/2" = 1'-0" (@ STATION 7.)

# WEBB 14 ROWING AND SAILING DINGHY.

L.O.A. 14'-2"
BEAM. 4'-7"
HULL DEPTH 8" (MAX).
DAGGER BOARD. 2'-9" (MAX)

SAIL AREA 90 SQ FT.
BALANCED LUGSAIL KETCH.
DISPLACEMENT APPX 200# FULLY RIGGED.

CONSTRUCTION.

1. KEEL. SAWN FROM. 2"x8" (NOM) MAHOGANY
2. KEELSON. 1x4 (NOM) DOUGLAS FIR OR MAHOGANY.
3. STEM POST SAWN FROM. 2x6 (NOM). MAHOGANY
4. TRANSOM 1" (NOM) PLANKING SPLINED AND GLUED TOGETHER. MAHOGANY.
5. KNEES @ KEEL 2" (NOM) MIN 8" ON EACH LEG. MAHOGANY
6. " @ QUARTERS 1 1/4" (NOM) MIN 6" ON EACH LEG. MAHOGANY
7. PLANKING. 1/4" DOUGLAS FIR PLYWOOD SCARPHED TO LENGTH REQUIRED
8. TOP STRAKE 3/8" FIR PLYWOOD (OR MAHOGANY IF PREFERRED) ALL PLANKING JOINTS GLUED AND CLENCH NAILED (EPOXY GLUE + 5/8" COPPER TACKS)
9. FORE DECK 1" NOM MAHOGANY OR CEDAR ALSO AFT DECK.
10. THWARTS 1" NOM. MAHOGANY OR CEDAR. ON 2"x1" D.F. RISERS
11. DAGGER BOARD CASE 1" NOM CEDAR.
12. DAGGER BOARD 1/2" PLYWOOD OR 5/8" MAHOGANY
13. RUDDER. 1/2" PLYWOOD WITH 1" NOM. CEDAR CHEEKS. OR 3/4" MAHOG.
14. MASTS. 2 1/2" ø @ BOOM AND SUPPORTS TAPER TO 1 1/4" @ TOP & STEPS.
15. BOOMS & GAFFS. 1 1/2" ø @ HALYARD OR DOWNHAUL TAPER TO 1" ø AT ENDS.
16. GUNWALES. 1"x 1/2" MAHOGANY TAPERED TO 3/4" @ BOW + STERN. 1/2 OVAL SECTION
17. WASH STRAKE. 1 1/2 NOM MAHOGANY (LAMINATE FROM 1/8" STRIPS AT TIGHT RADIUS SECTIONS FORE AND AFT)
18. SAILS - 3 oz TAN BACK DACRON. ROPED HEAD, LUFF & FOOT. LACED TO BOOM + GAFF W. 1/8" ø LACING. LUFF 4'0" HEAD 7'8" FOOT 7'-9" LEACH 10'-1". AREA 45 SF. PEAK TO TACK. 11 1/2 1 MKCAT TO OUTHAUL 7'-6" 1 INSIGNIA. WHITE 8" HIGH. GAFF + BOOM TIED TO HALYARD + DOWNHAUL BY TOPSAIL HALYARD BEND. HALYARD REEVED THRO HOLE IN TOP OF MAST AND HAULED TIGHT. DOWNHAUL BELAYED TO CLEAT ON MAST.
19. ADDITIONAL MAST STEP 6'-0" FROM BOW TO ALLOW BALANCED SAILING UNDER ONE SAIL ONLY.
20. OARS. 2 PAIR 8'-6" LONG. (OARS DOWN TO 7'-6" MAY BE USED IF PREF.)

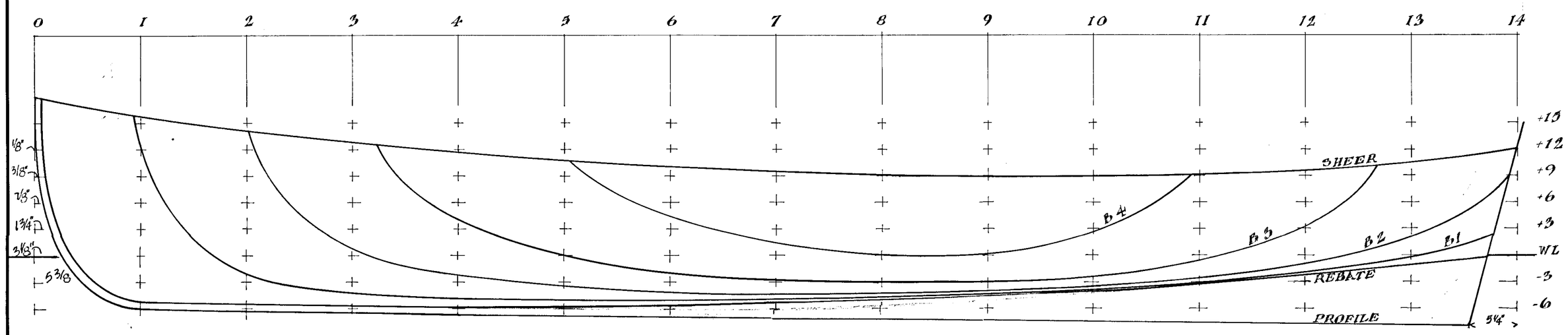


PROFILE SCALE 1 1/2" = 1'-0"

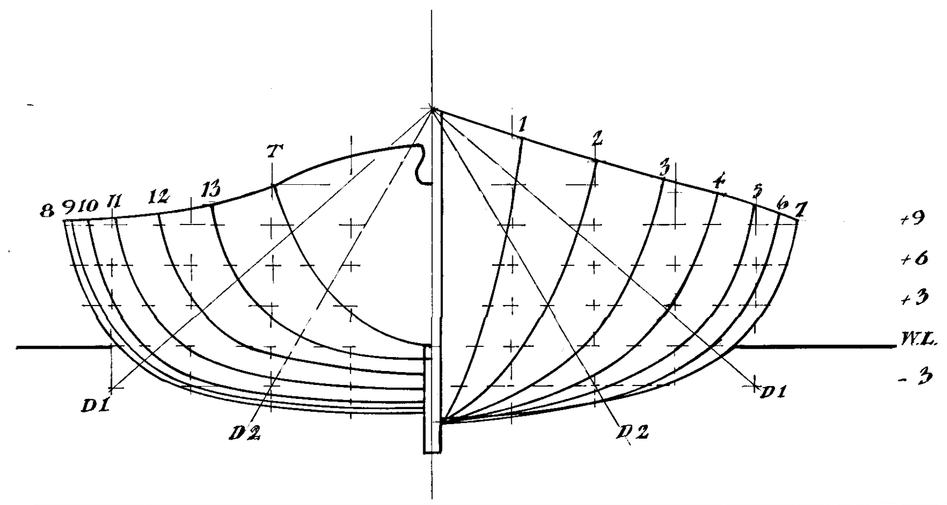


| Offsets to outside of planking in feet inches and eighths of an inch. | | | | | | | | | | | | | | | |
|---|---|---|---|---|---|---|---|---|---|---|---|---|---|---|---|
| Stations 12" o.c. | 0 | 1 | 2 | 3 | 4 | 5 | 6 | 7 | 8 | 9 | 10 | 11 | 12 | 13 | 14 OR TRANSOM |
| Heights above/below WL | | | | | | | | | | | | | | | |
| Rebate (-) | | 0-5-3 | 0-5-4 | 0-5-5 | 0-5-6 | 0-5-6 | 0-5-6 | 0-5-5 | 0-5-2 | 0-4-7 | 0-4-3 | 0-3-3 | 0-2-1 | 0-1-0 | 0-0-0 |
| Sheer (+) | 1-6-0 | 1-3-7 | 1-2-1 | 1-0-7 | 0-11-6 | 0-10-7 | 0-10-0 | 0-9-5 | 0-9-2 | 0-9-0 | 0-9-0 | 0-9-2 | 0-9-5 | 0-10-5 | 1-0-0 |
| Profile (-) | | 0-6-3 | 0-6-4 | | | | straight | | | | | | | | 0-8-0 |
| B1 | | -1-0-7 | -0-2-1 | -0-4-2 | -0-5-0 | -0-5-2 | -0-5-3 | -0-5-2 | -0-5-1 | -0-4-7 | -0-4-0 | -0-3-1 | -0-2-0 | -0-0-3 | +0-2-2 |
| B2 | | — | — | +0-0-6 | -0-2-3 | -0-3-5 | -0-4-3 | -0-4-5 | -0-4-5 | -0-4-3 | -0-3-5 | -0-2-3 | -0-0-6 | +0-1-6 | — |
| B3 | | — | — | — | +0-3-6 | -0-0-2 | -0-2-0 | -0-2-6 | -0-3-0 | -0-3-0 | -0-2-3 | -0-0-4 | +0-3-3 | | |
| B4 | | — | — | — | — | — | +0-4-2 | +0-1-2 | 0-0-0 | +0-0-5 | +0-3-4 | — | — | — | — |
| Half Breadths | | | | | | | | | | | | | | | |
| Sheer | | 0-6-0 | 0-11-4 | 1-4-5 | 1-8-7 | 1-11-6 | 2-1-7 | 2-3-0 | 2-3-4 | 2-3-1 | 2-1-7 | 1-11-7 | 1-8-5 | 1-4-6 | 1-0-0 |
| W.L. -3 | | 0-2-5 | 0-5-3 | 0-8-0 | 0-10-6 | 1-1-0 | 1-3-3 | 1-5-3 | 1-6-5 | 1-6-3 | 1-3-4 | 0-6-5 | — | — | — |
| WL | | 0-3-5 | 0-7-3 | 0-11-1 | 1-2-7 | 1-6-2 | 1-8-7 | 1-11-1 | 1-11-7 | 1-11-2 | 1-9-4 | 1-6-3 | 1-2-1 | 0-7-7 | — |
| WL + 3" | | 0-3-7 | 0-8-5 | 1-1-4 | 1-5-5 | 1-9-3 | 1-11-3 | 2-1-0 | 2-1-7 | 2-1-2 | 1-11-6 | 1-9-4 | 1-6-0 | 1-1-2 | 0-6-6 |
| WL + 6" | | 0-4-6 | 0-9-6 | 1-3-0 | 1-7-2 | 1-10-5 | 2-0-5 | 2-2-2 | 2-2-7 | 2-2-3 | 2-0-7 | 1-10-7 | 1-7-5 | 1-3-1 | 0-9-5 |
| WL +9" | | 0-5-3 | 0-10-6 | 1-4-1 | 1-8-4 | 1-11-5 | 2-1-5 | 2-3-0 | 2-3-3 | 2-3-1 | 2-1-6 | 1-11-6 | 1-8-5 | 1-4-3 | 0-11-1 |
| Diagonals | | | | | | | | | | | | | | | |
| D1 | | 0-8-4 | 1-3-3 | 1-7-5 | 1-11-2 | 2-2-7 | 2-3-5 | 2-4-5 | 2-5-1 | 2-4-5 | 2-3-7 | 2-1-7 | 1-10-7 | 1-7-3 | 1-1-7 |
| D2 | | 0-10-6 | 1-4-7 | 1-9-2 | 1-11-3 | 2-0-4 | 2-1-4 | 2-1-5 | 2-1-5 | 2-1-2 | 2-0-5 | 1-11-2 | 1-9-3 | 1-7-5 | 1-3-3 |

| REVISIONS | BY |
|---|---|
| | |
| | |
| | |
| | |
| | |
| | |

NOTE.
COPYRIGHT REMAINS WITH DESIGNER
COST OF PLANS COVERS CONSTRUCTION OF ONE VESSEL. FEE FOR BUILDING ADDITIONAL VESSELS TO BE AGREED WITH THE DESIGNER.


DESIGNED BY
DAVID I. WEBB
1943 So. HOLT AV
LOS ANGELES.
CA 90034.


Date 3 OCT 81.
Scale 1 1/2" = 1'-0" U.O.N.
Drawn D.I.W.
Job 80-4
Sheet I
Of Sheets


24X36 PRINTED ON NO. 1000H-B CLEARPRINT FADE-OUT